V_{RRM}	=	1200	V
$I_{F(AVG)}$	=	40	A
Q_C	=	250	nC

Features

- 1200-Volt Schottky Rectifier
- Zero Reverse Recovery
- Zero Forward Recovery
- Positive Temperature Coefficient on V_F
- Temperature-Independent Switching Behavior

SOT-227

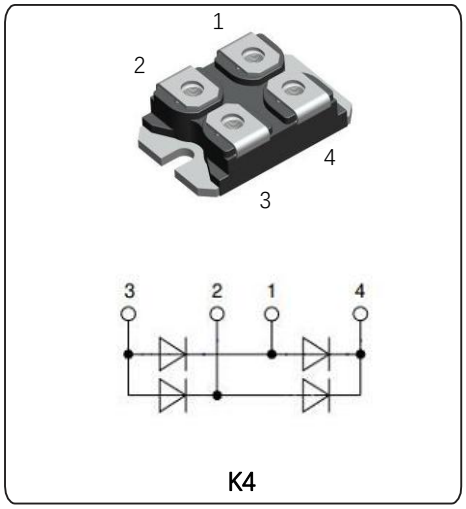

Mechanical Data

- Case:SOT-227
- Molding compound meets UL94V-0 flammability rating
- Polarity: As marked

Maximum Ratings

Symbol	Parameter	Value	Unit	Test Conditions	Note
V_{RRM}	Repetitive Peak Reverse Voltage	1200	V		
V_{DC}	DC Blocking Voltage	1200	V		
$I_{F(AVG)}$	Average Forward Current	40	A	$T_C \leq 135^\circ C$	1
I_{FSM}	Non-Repetitive Forward Surge Current	250	A	$T_C = 25^\circ C$, $t_p = 8.3ms$, Half Sine Wave	1
V_{ISO}	RMS isolation voltage (AC 50Hz)	3500	V	Any terminal to case,t=1S	
T_J	Operating Junction Temperature	-55 to 175	˚C		

1. Assumes Thermal Resistance of 0.6˚C/W or less

Electrical Characteristics

Symbol	Parameter	Typ.	Max.	Unit	Test Conditions	Note
V_F	Forward Voltage	1.55 2.3	1.8 3	V	I_F = 40A, T_J = 25°C I_F = 40A, T_J = 175°C	Fig.1
I_R	Reverse Current	3 20	100 200	μA	V_R = 1200V, T_J = 25°C V_R = 1200V, T_J = 175°C	Fig.2
C	Total Capacitance	2660 255 190	/	pF	V_R = 0V, T_J = 25°C, f = 1MHz V_R = 400V, T_J = 25°C, f = 1MHz V_R = 800V, T_J = 25°C, f = 1MHz	Fig.3
Q_C	Total Capacitive Charge	250	/	nC	V_R = 1200V, I_F = 40A di/dt = 200A/μs, T_J = 25°C	Fig.4

Typical Performance

Figure 1. Forward Characteristics

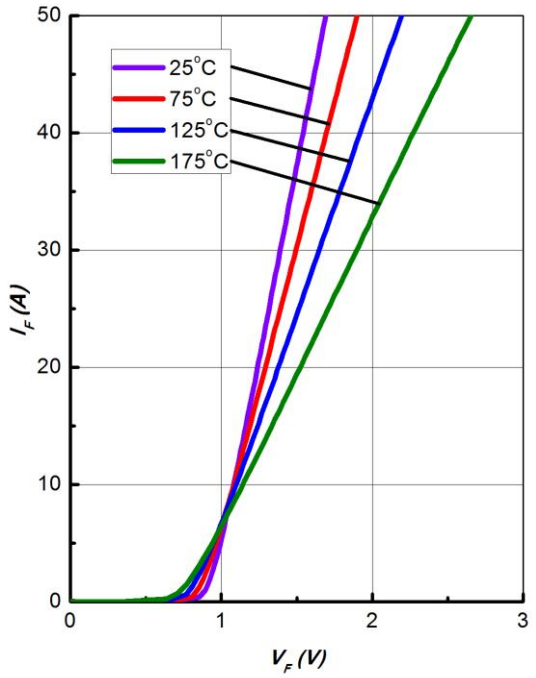

Figure 2. Reverse Characteristics

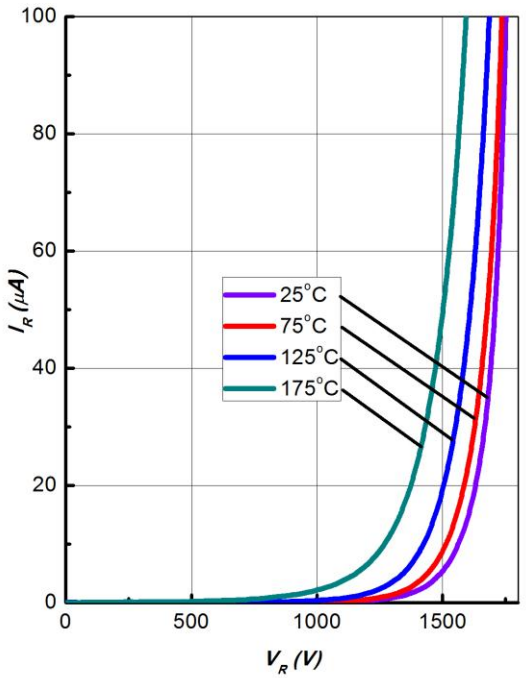

Typical Performance

Figure 3. Total Capacitance vs. Reverse Voltage

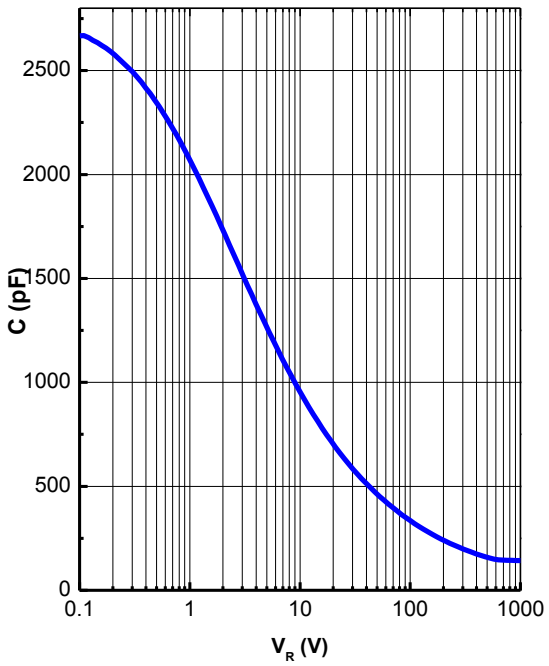

Figure 4. Total Capacitance Charge vs. Reverse Voltage

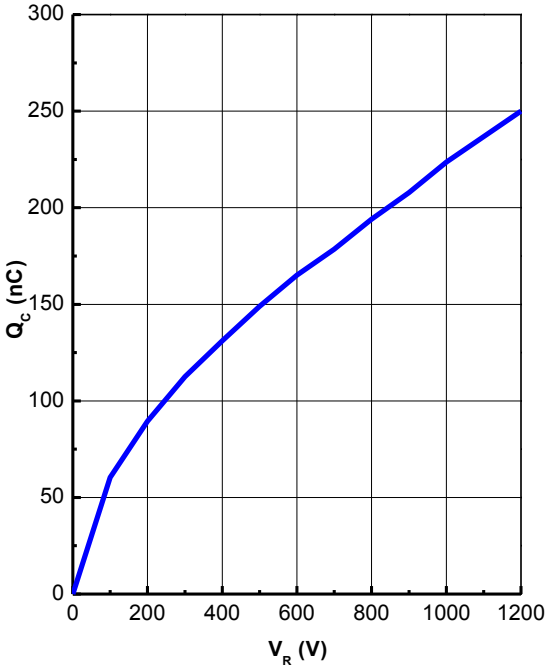

SOT-227package

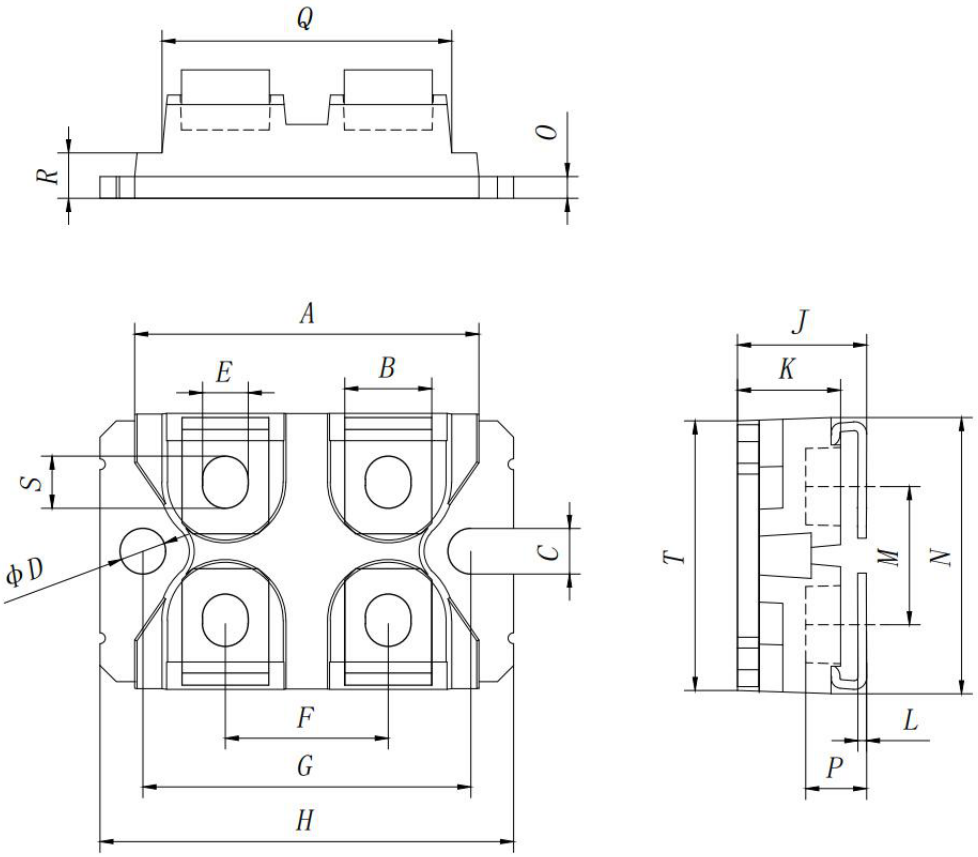

SYMBOLS	DIMENSION IN MM		
	MIN	NOM	MAX
A	31.20	31.70	32.20
B	7.50	8.00	8.50
C	3.80	4.20	4.60
D	3.80	4.20	4.60
E	3.80	4.20	4.60
F	14.50	15.00	15.50
G	29.80	30.20	30.60
H	37.70	38.10	38.50
J	11.50	11.90	12.30
K	8.90	9.50	10.00
L	0.75	0.80	0.85
M	12.40	12.70	13.00
N	25.00	25.40	25.80
O	1.70	2.00	2.30
P	4.95	5.60	6.10
Q	26.40	26.70	27.00
R	3.90	4.18	4.45
S	4.20	4.80	5.40
T	23.80	24.80	25.80

Friendship Reminder

■ JiNan JingHeng（hereinafter referred to as JH） reserves the right to make changes to this document and its products and specifications at anytime without notice.

■ Customers should obtain and confirm the latest product information and specifications before final design, purchase or use.

■ JH makes no warranty, representation or guarantee regarding the suitability ofi ts products for any particular purpose, nor does JH assume any liability for application assistance or customer product design.

■ JH does not warrant or accept any liability with products which are purchased or used for any unintended or unauthorized application.

■ No license is granted by implication or otherwise under any intellectual property rights of JH.

■ JH's products are not authorized for use as critical components in life support devices or systems without express written approval of JH.