SEMICONDUCTOR

SJ7N65 Series
650V SUPER-JUNCTION Power MOSFET

FEATURES

- $R_{DS(ON)}$<0.95Ω@V_{GS}=10V
- 100% avalanche tested
- RoHS compliant

PRODUCT SUMMARY

V_{DS}(V)	RDS(on)(Ω)Typ	I_D(A)
650	0.85@ VGS=10V	7

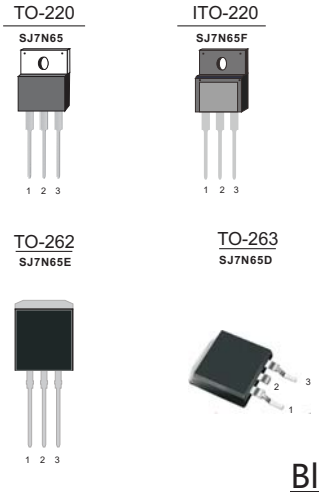

MECHANICAL DATA

- Case:TO-220,ITO-220, TO-262, TO-263 package

Ordering Information

Part No.	Package Type	Package	Quality(box)
SJ7N65	TO-220	Tube	1000
SJ7N65F	ITO-220	Tube	1000
SJ7N65E	TO-262	Tube	1000
SJ7N65D	TO-263	Tape & Reel	800

Pin Definition:

1. Gate
2. Drain
3. Source

Block Diagram

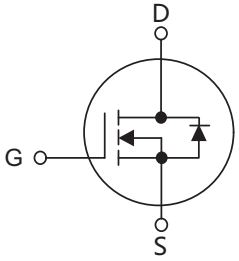

ABSOLUTE MAXIMUM RATINGS

(T_C=25 ℃, unless otherwise specified)

PARAMETER		SYMBOL	RATINGS	UNIT
Drain-Source Voltage		V_{DS}	650	V
Gate-Source Voltage		V_{GS}	30	V
Continuous Drain Current	TO-220/TO-263/TO-262	I_D	7	A
	ITO-220		7 ※	
Pulsed Drain Current (Note 1)		I_{DM}	28	A
Avalanche Energy(Note 2)		E_{AS}	86	mJ
Power Dissipation	TO-220/TO-263/TO-262	P_D	62.5	W
	ITO-220		35	
Junction Temperature		T_J	+150	C
Storage Temperature		T_{STG}	-55 ~ +150	C

※ limited by maximum junction temperature

THERMAL DATA

PARAMETER		SYMBOL	RATING	UNIT
Junction to Ambient	TO-220/ TO-262/TO-263	$R\theta_{JA}$	62	C/W
	ITO-220		82	
Junction to Case	TO-220/TO-263/TO-262	$R\theta_{JC}$	2.0	C/W
	ITO-220		4.1	

ELECTRICAL CHARACTERISTICS (T_C=25 ℃, unless otherwise specified)

PARAMETER		SYMBOL	TEST CONDITIONS	MIN	TYP	MAX	UNIT
OFF CHARACTERISTICS							
Drain-Source Breakdown Voltage		BV_{DSS}	V_{GS}=0V,I_D=250μA	650			V
Drain-Source Leakage Current		I_{DSS}	V_{DS}=650V,V_{GS}=0V			1	μA
Gate- Source Leakage Current	Forward	I_{GSS}	V_{GS}=30V,V_{DS}=0V			100	nA
	Reverse		V_{GS}=-30V,V_{DS}=0V			-100	nA
ON CHARACTERISTICS(Note 3)							
Gate Threshold Voltage		$V_{GS(TH)}$	V_{DS}=V_{GS},I_D=250μA	2.5		4.5	V
DRAIN-SOURCE ON-RESISTANCE		$R_{DS(ON)}$	V_{GS}=10V,I_D=3.5A		0.85	0.95	Ω
DYNAMIC CHARACTERISTICS							
Input Capacitance		C_{ISS}	V_{DS}=25V,V_{GS}=0V,f=1MHz		332		pF
Output Capacitance		C_{OSS}			373		pF
Reverse Transfer Capacitance		C_{RSS}			1 0		pF
SWITCHING CHARACTERISTICS							
Turn-On Delay Time		$t_{D(ON)}$	V_{DD}=400V,I_D=3.5A, R_G=20Ω		25		ns
Turn-On Rise Time		t_R			55		ns
Turn-Off Delay Time		$t_{D(OFF)}$			110		ns
Turn-Off Fall Time		t_F			9		ns
Total Gate Charge		Q_G	V_{DS}=400V,I_D=3.5A, V_{GS}=10V		9.2		nC
Gate-Source Charge		Q_{GS}			2.2		nC
Gate-Drain Charge		Q_{GD}			4.2		nC
DRAIN-SOURCE DIODE CHARACTERISTICS AND MAXIMUM RATINGS							
Drain-Source Diode Forward Voltage		V_{SD}	V_{GS}=0V, I_S=7A		0.9	1.5	V
Maximum Continuous Drain-Source Diode Forward Current		I_S				7	A
Reverse Recovery Current		I_{RRM}	V_{GS}=0V, I_S=3. 5A dI_F/dt=100A/μs（Note 1）		18		A
Reverse Recovery Time		t_{rr}			190		ns
Reverse Recovery Charge		Q_{RR}			2.3		μC

Note:1. Repetitive Rating : Pulse width limited by maximum junction temperature

2. L=60mH,I_{AS}=1.7A,V_{DD}=150V,Starting T_J=25 ℃

3. Pulse Test: Pulse width ≤300μS Duty cycle≤1%.

Typical characteristics Diagrams

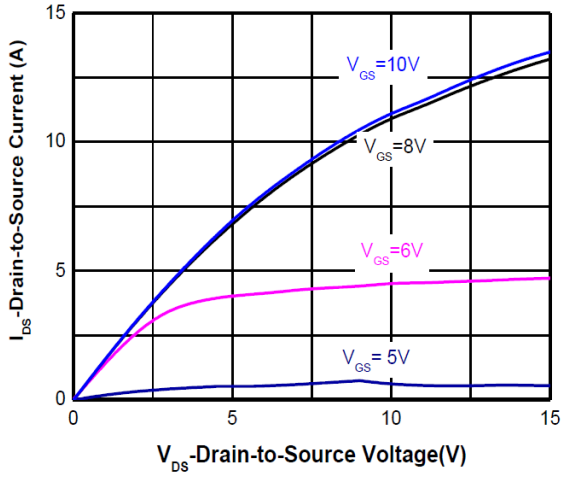

Output characteristics

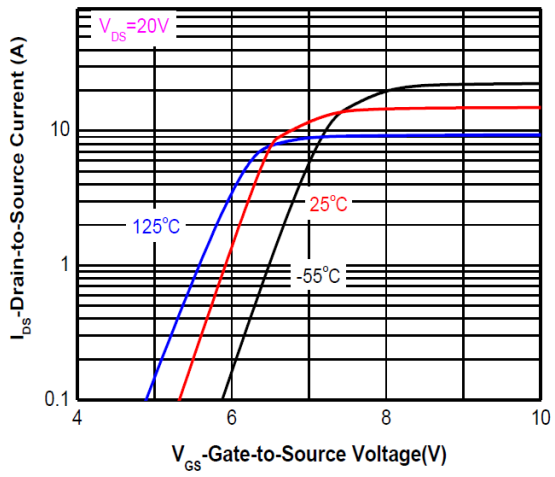

Transfer characteristics

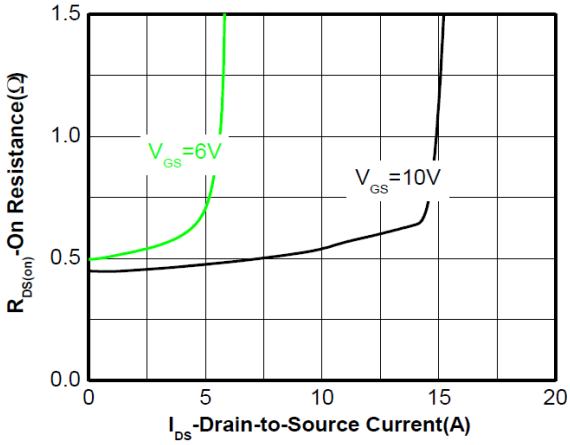

On-Resistance vs. Drain current

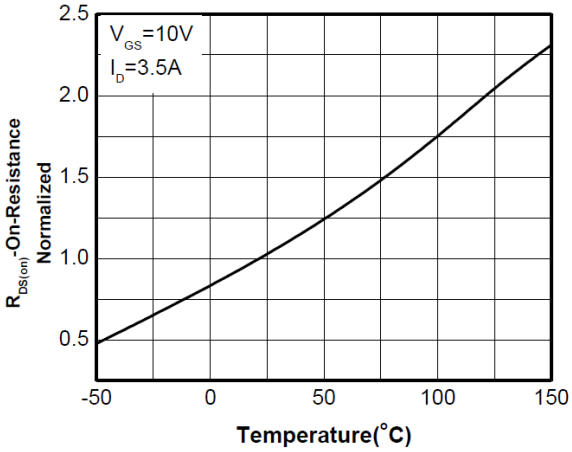

On-Resistance vs. Junction temperature

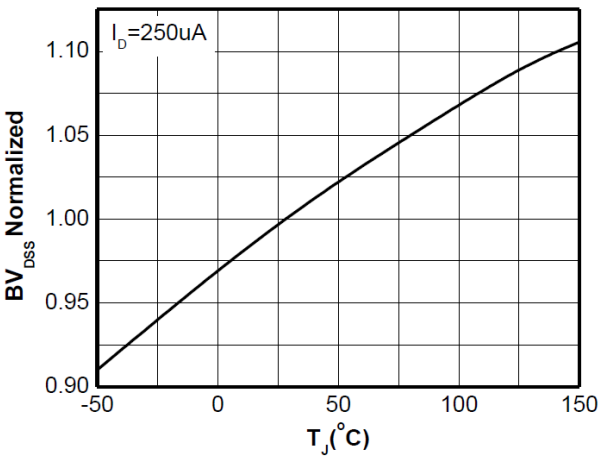

Breakdown Voltage vs. Junction temperature

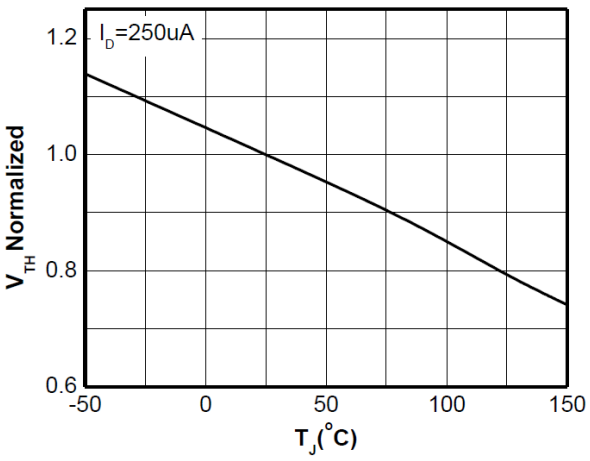

Threshold voltage vs. Junction temperature

Typical characteristics Diagrams

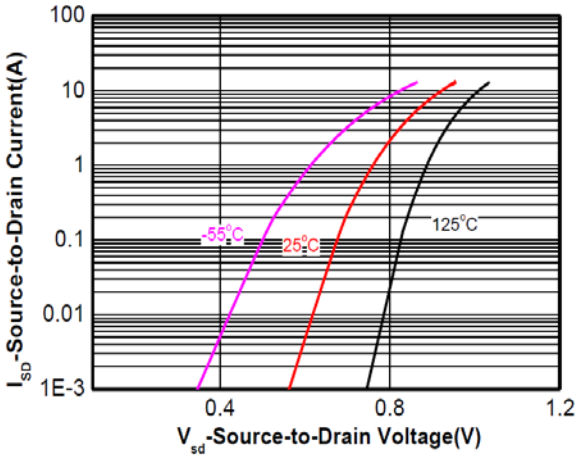

Body diode forward voltage

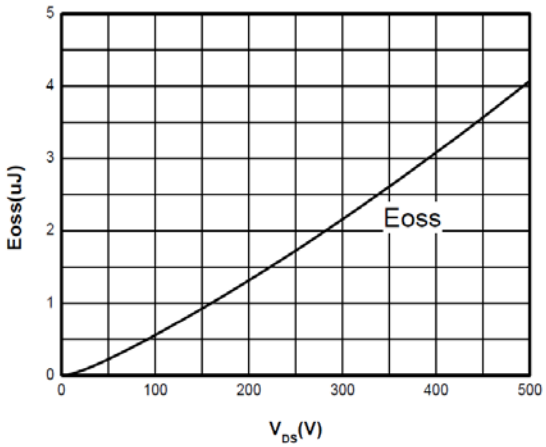

Coss stored Energy

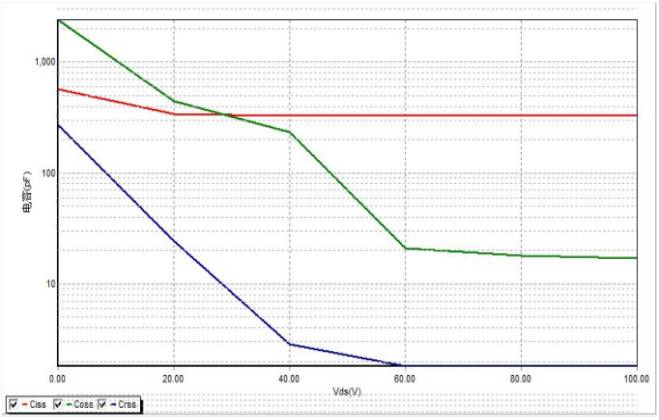

Capacitance

Gate charge Characteristics

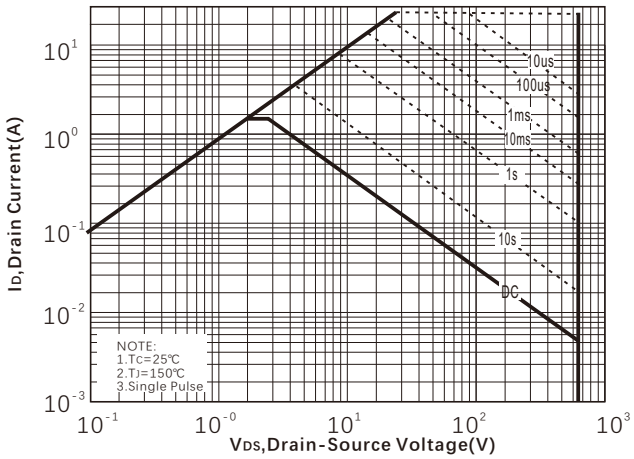

Safe operating area

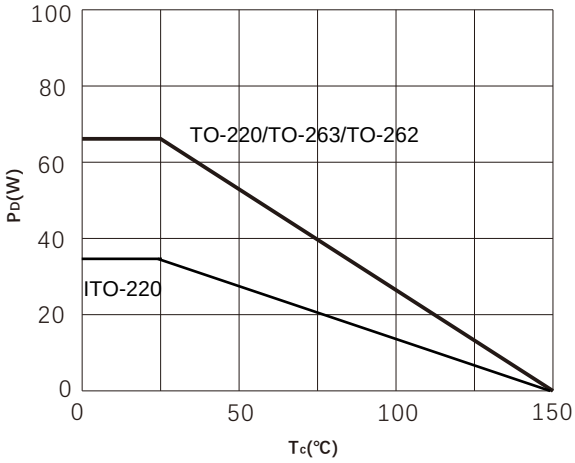

Power dissipation

Typical characteristics Diagrams

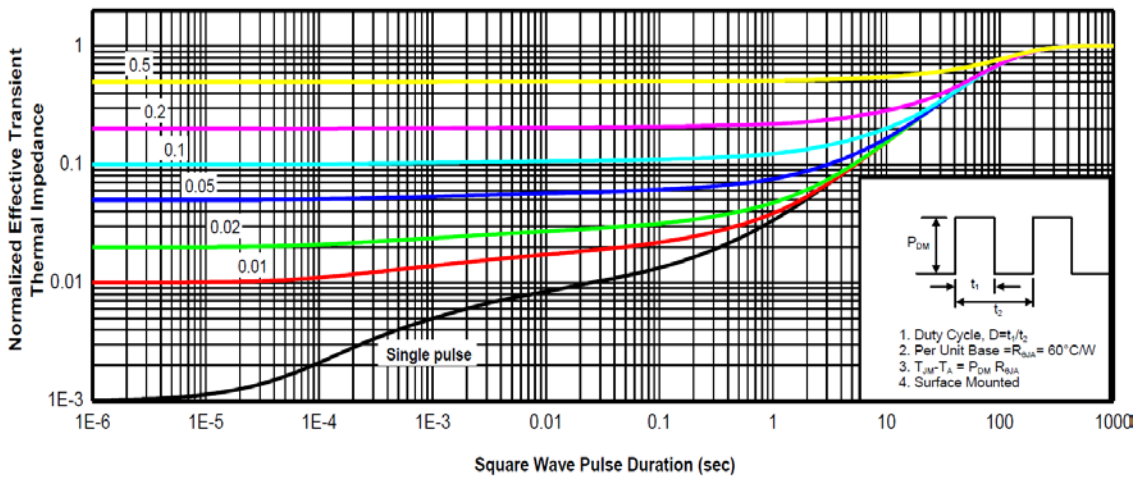

Transient thermal response (Junction-to-Ambient)

TYPICAL TEST CIRCUIT

Table 20 Switching times test circuit and waveform for inductive load

Switching times test circuit for inductive load	Switching time waveform
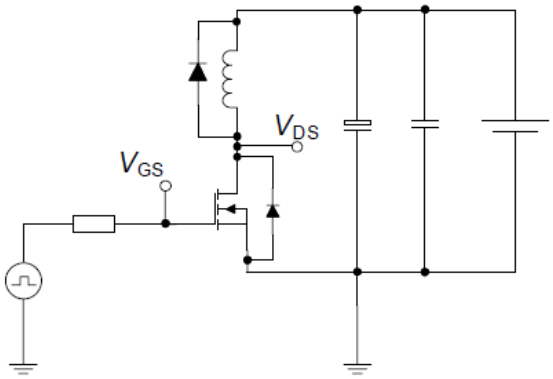	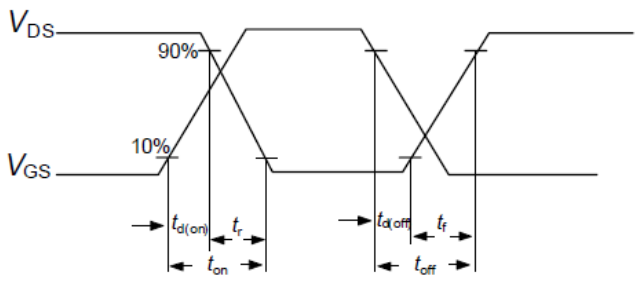

Table 21 Unclamped inductive load test circuit and waveform

Unclamped inductive load test circuit	Unclamped inductive waveform
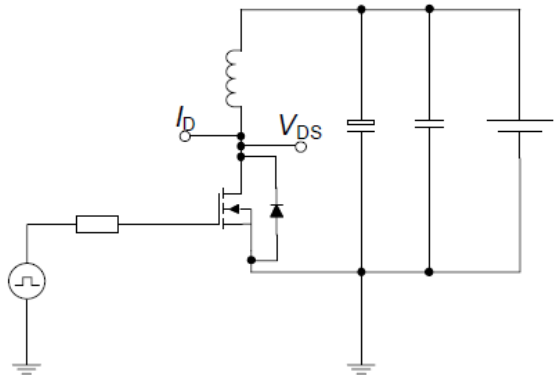	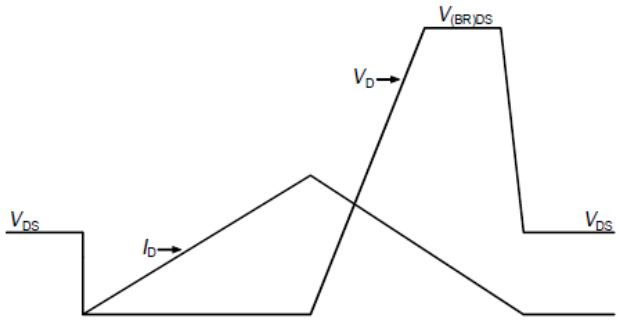

Table 22 Test circuit and waveform for diode characteristics

Test circuit for diode characteristics	Diode recovery waveform
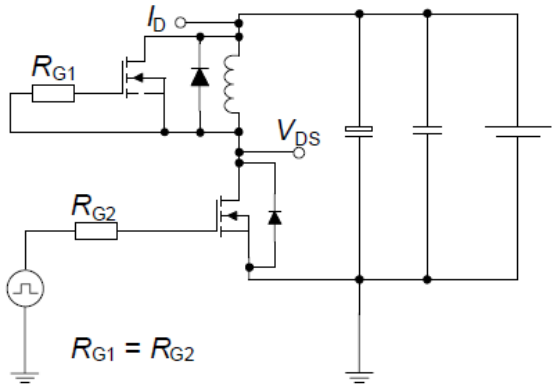	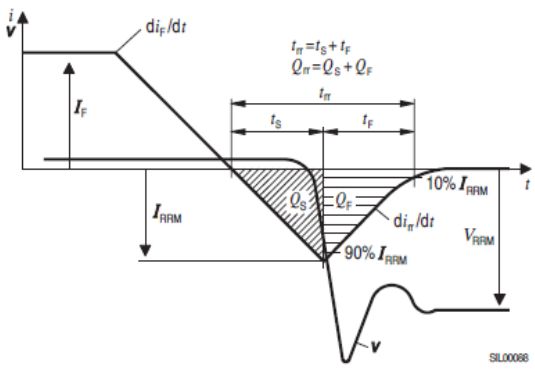

Product Names Rules

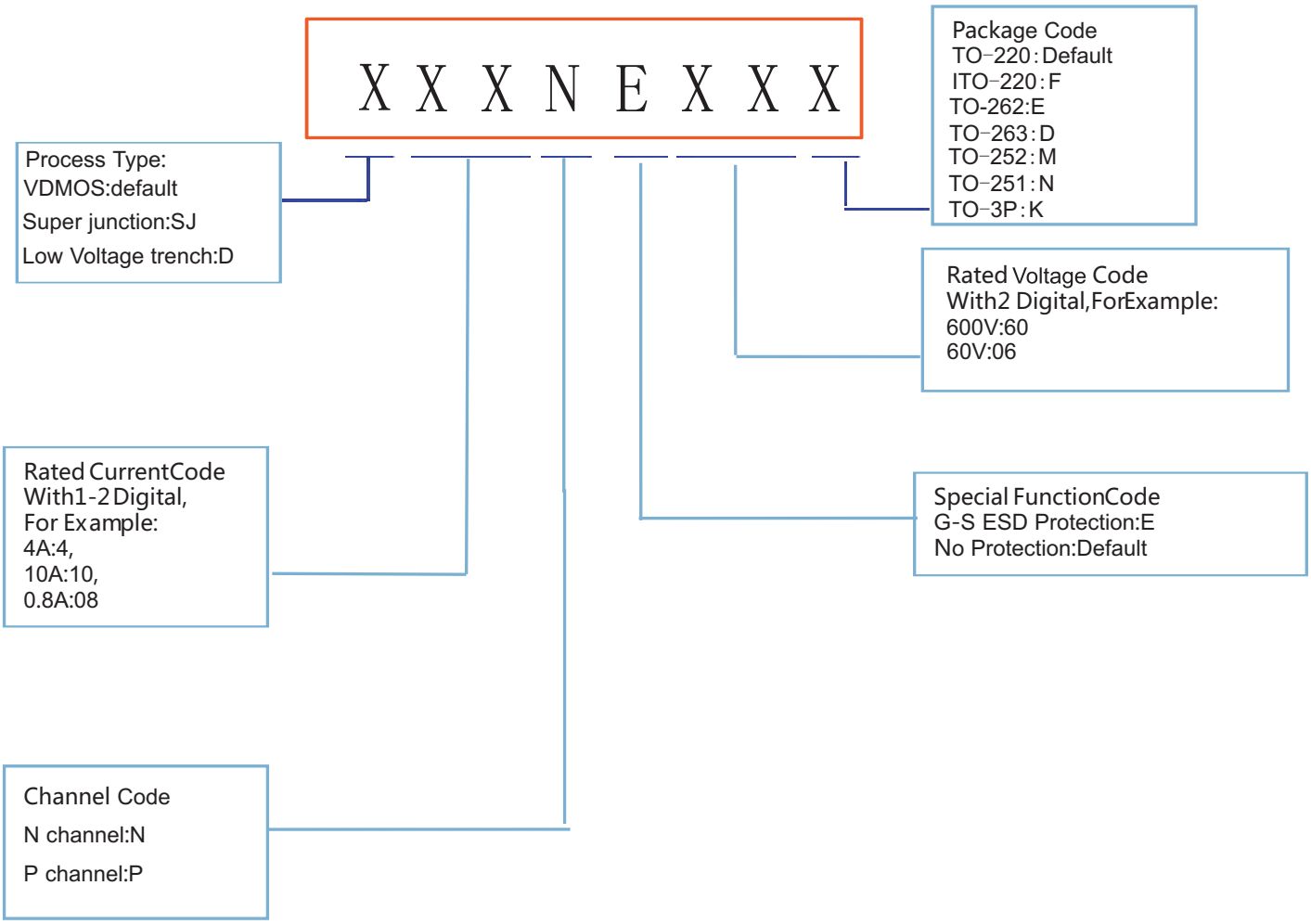

Dimensions

TO-220 PACKAGE OUTLINE DIMENSIONS

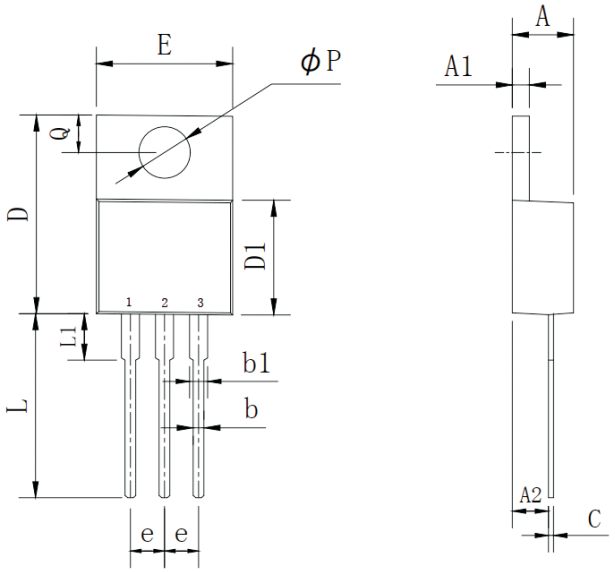

Symbol	Dimensions In Millimeters		Dimensions In Inches	
	MIN	MAX	MIN	MAX
A	4.25	4.87	0.167	0.192
A1	1.07	1.47	0.042	0.058
A2	2.03	2.92	0.080	0.115
b	0.51	1.11	0.020	0.044
b1	0.97	1.6	0.038	0.063
C	0.3	0.7	0.012	0.028
D	14.6	15.9	0.575	0.626
D1	8.04	9.3	0.317	0.366
E	9.57	10.57	0.377	0.416
e	2.34	2.74	0.092	0.108
L	12.58	14.3	0.495	0.563
L1	2.8	4.2	0.110	0.165
P	3.4	4.14	0.134	0.163
Q	2.45	3	0.096	0.118

ITO-220 PACKAGE OUTLINE DIMENSIONS

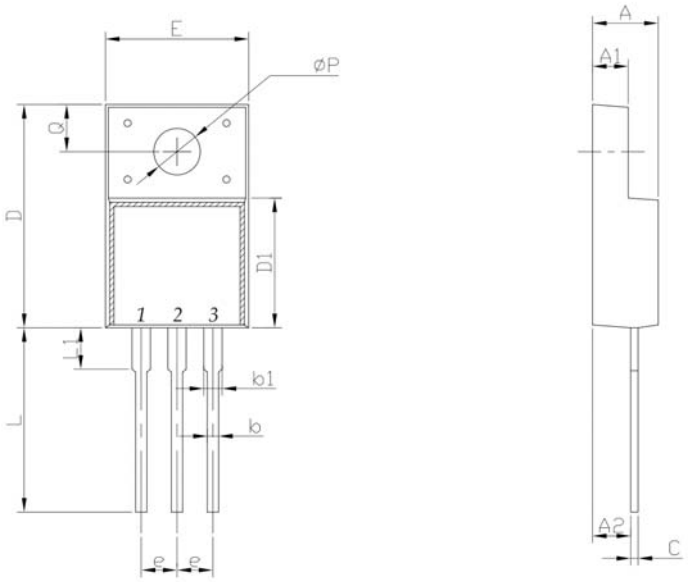

Symbol	Dimensions In Millimeters		Dimensions In Inches	
	MIN	MAX	MIN	MAX
A	4.24	4.9	0.167	0.193
A1	2.3	2.92	0.091	0.115
A2	2.61	2.81	0.103	0.111
b	0.3	1	0.012	0.039
b1	0.9	1.55	0.035	0.061
C	0.3	0.7	0.012	0.028
D	14.5	16.36	0.571	0.644
D1	8.8	9.41	0.346	0.370
E	9.5	10.5	0.374	0.413
e	2.3	2.75	0.091	0.108
L	12.6	14	0.496	0.551
L1	2.45	4.3	0.096	0.169
P	2.9	3.8	0.114	0.150
Q	2.5	3.55	0.098	0.140

Dimensions

TO-263 PACKAGE OUTLINE DIMENSIONS

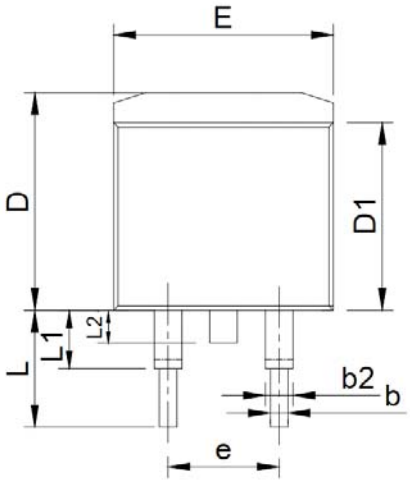

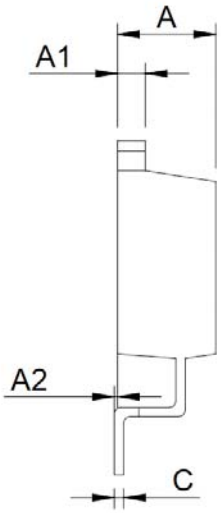

Symbol	Dimensions In Millimeters		Dimensions In Inches	
	MIN	MAX	MIN	MAX
A	4.25	4.87	0.167	0.192
A1	1.07	1.47	0.042	0.058
A2	0	0.25	0.000	0.010
b	0.61	1.01	0.024	0.040
b1	1.2	1.34	0.047	0.053
C	0.3	0.6	0.012	0.024
D	9.48	10.84	0.373	0.427
D1	8.49	9.3	0.334	0.366
E	9.7	10.31	0.382	0.406
e	4.88	5.28	0.192	0.208
L	4.46	5.85	0.176	0.230
L1	1.33	2.33	0.052	0.092
L2	0	2.2	0.000	0.087

TO-262 PACKAGE OUTLINE DIMENSIONS

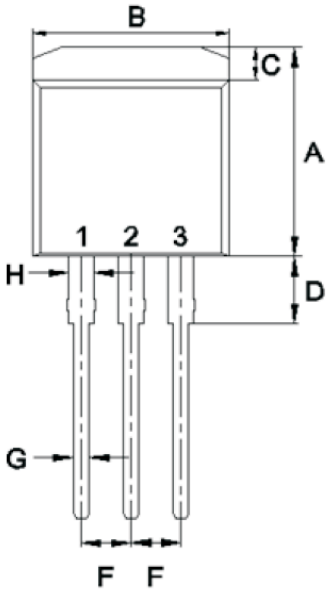

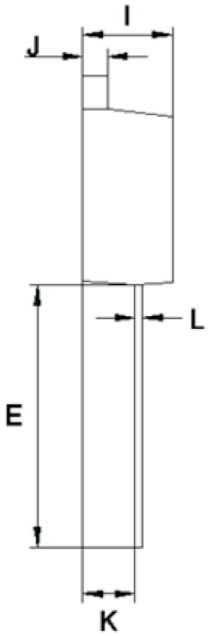

Symbol	Dimensions In Millimeters		Dimensions In Inches	
	MIN	MAX	MIN	MAX
A	10.14	11.14	0.399	0.439
B	9.57	10.57	0.377	0.416
C	1.15	1.84	0.045	0.072
D	2.95	3.95	0.116	0.156
E	12.25	13.75	0.482	0.541
F	2.34	2.74	0.092	0.108
G	0.51	1.11	0.020	0.044
H	0.97	1.57	0.038	0.062
I	4.25	4.87	0.167	0.192
J	1.07	1.47	0.042	0.058
K	2.03	2.92	0.080	0.115
L	0.3	0.6	0.012	0.024

Friendship Reminder

■ JiNan JingHeng（hereinafter referred to as JH） reserves the right to make changes to this document and its products and specifications at anytime without notice.

■ Customers should obtain and confirm the latest product information and specifications before final design, purchase or use.

■ JH makes no warranty, representation or guarantee regarding the suitability of its products for any particular purpose, nor does JH assume any liability for application assistance or customer product design.

■ JH does not warrant or accept any liability with products which are purchased or used for any unintended or unauthorized application.

■ No license is granted by implication or otherwise under any intellectual property rights of JH.

■ JH's products are not authorized for use as critical components in life support devices or systems without express written approval of JH.