SEMICONDUCTOR

D20P06 Series

20A 60V P-Channel Enhancement Mode Power MOSFET

Genaral Description

These P-channel enhanced vdmosfets, used advanced trench technology and design, provide to excellent Rdson with low gate charge. Which accords with the RoHS standard.

Product Summary			
V_{DS}	$R_{DS(on)}$ (mΩ) Typ	I_D (A)	Qg (Typ)
-60V	58 @ -10V-10A	-20	28.2nc

Features

- Fast switching
- Low on-resistance
- Low gate charge and input capacitance
- 100% avalanche tested

Mechanical Data

- Case:TO-220,ITO-220, TO-263, TO-263-7L，TO-262, TO-251, TO-252 Package

Application

- Power switching applications
- Inverter management system
- Automotive electronics

TO-220
D20P06

ITO-220
D20P06F

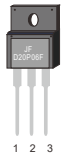

TO-263
D20P06D

TO-262
D20P06E

TO-251
D20P06N

TO-252
D20P06M

TO-263-7L
D20P06D7

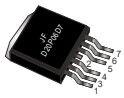

Ordering Information

Part No.	Package Type	Package	Quality(box)
D20P06	TO-220	Tube	1000
D20P06F	ITO-220	Tube	1000
D20P06D	TO-263	Tape & Reel	800
D20P06E	TO-262	Tube	1000
D20P06N	TO-251	Tube	1000
D20P06M	TO-252	Tape & Reel	3000
D20P06D7	TO-263-7L	Tape & Reel	800

Pin Definition:

1. Gate
2. Drain
3/4/5/6/7. Source

Block Diagram

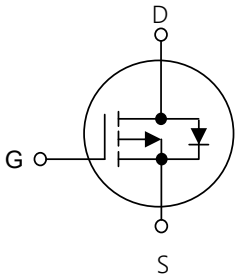

Table1 Absolute Maximum Ratings (Tc=25°C, unless otherwise specified)

Parameter		Symbol	D20P06/D20P06D/D20P06E D20P06M/D20P06N D20P06D7	D20P06F	Unit
Drain-Source Voltage		V_{DS}	60		V
Gate-Source Voltage		V_{GS}	±20		V
Continuous Drain Current	Tc=25°C	I_D	-20	-20※	A
	Tc=100°C		-14	-14※	
Pulsed Drain Current (Note 1)		I_{DM}	-80		A
Single Pulse Avalanche Energy(Note 2)		E_{AS}	96		mJ
Power Dissipation Tc=25°C		P_D	43	18	W
Operating Junction and Storage Temperature		T_J/T_{STG}	-55~+175		°C

※ limited by maximum junction temperature

Table 2.Thermal Characteristics

Parameter	Symbol	D20P06/D20P06D/ D20P06M/D20P06N D20P06E/D20P06D7	D20P06F	Unit
Thermal resistance Junction to Ambient	$R_{\theta JA}$	75	75	°C/W
Thermal resistance Junction to Case	$R_{\theta JC}$	3.49	8.33	°C/W

Table 3. Electrical Characteristics (T_C=25°C, unless otherwise specified)

Parameter		Symbol	Test Conditions	Min	Typ	Max	Unit
Off Characteristics							
Drain-Source Breakdown Voltage		BV_{DSS}	V_{GS}=0V,I_D=-250μA	-60	-	-	V
Drain-Source Leakage Current		I_{DSS}	V_{DS}=-60V,V_{GS}=0V	-	-	-1	μA
Gate- Source Leakage Current	Forward	I_{GSS}	V_{GS}=20V,V_{DS}=0V	-	-	100	nA
	Reverse		V_{GS}=-20V,V_{DS}=0V	-	-	-100	nA
On Characteristics(Note 3)							
Gate Threshold Voltage		$V_{GS(TH)}$	V_{DS}=V_{GS},I_D=-250μA	-1.0	-1.6	-2.0	V
Static Drain-Source On-State Resistance		$R_{DS(ON)}$	V_{GS}=-10V,I_D=-10A	-	58	70	mΩ
			V_{GS}=-4.5V,I_D=-10A	-	70	84	
Dynamic Characteristics(Note 4)							
Input Capacitance		C_{ISS}	V_{DS}=-30V,V_{GS}=0V,f=1MHz	-	1528	-	pF
Output Capacitance		C_{OSS}		-	90	-	pF
Reverse Transfer Capacitance		C_{RSS}		-	60	-	pF
Forward Transfer Conductance		g_{fs}	V_{DS}=-5V,I_D=-8A	-	17	-	S
Switching Characteristics (Note 4)							
Turn-On Delay Time		td(on)	V_{DD}=-30V,I_D=-8A V_{GS}=-10V,R_{GEN}=3Ω,	-	6.6	-	ns
Turn-On Rise Time		t_R		-	42	-	ns
Turn-Off Delay Time		td(off)		-	37	-	ns
Turn-Off Fall Time		tf		-	63.5	-	ns
Total Gate Charge		Q_G	V_{DD}=-30V,I_D=-8A, V_{GS}=-10V	-	28.2	-	nC
Gate-Source Charge		Q_{GS}		-	7.2	-	nC
Gate-Drain Charge		Q_{GD}		-	3.8	-	nC
Drain-Source Diode Characteristics and Maximum Ratings							
Drain-Source Diode Forward Voltage		V_{SD}	V_{GS}=0V, I_S=-8A	-	-	-1.2	V
Maximum Continuous Drain-Source Diode Forward Current		I_S		-	-	-20	A
Reverse Recovery Time		trr	V_{GS}=0V, I_F=-8A dI_F/dt=100A/μs (Note 1)	-	29	-	ns
Reverse Recovery Charge		Q_{RR}		-	12.8	-	nC

Notes：1 Repetitive Rating:Pulse width limited by maximum junction temperature
2 L=0.5mH, I_D=-19.6A,V_{DD}=-50V,V_{GATE}=-10V,Starting T_J=25°C
3 Pulse Test: Pulse width ≤300μS,Duty cycle≤2%
4 Guaranteed by design,not subject to production

Typical Characteristics Diagrams

Figure 1.Output Characteristics

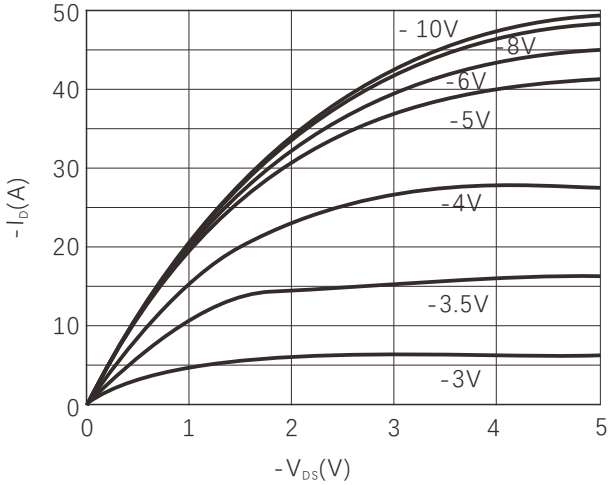

Figure2.Normalized RDS(ON) vs Temperature

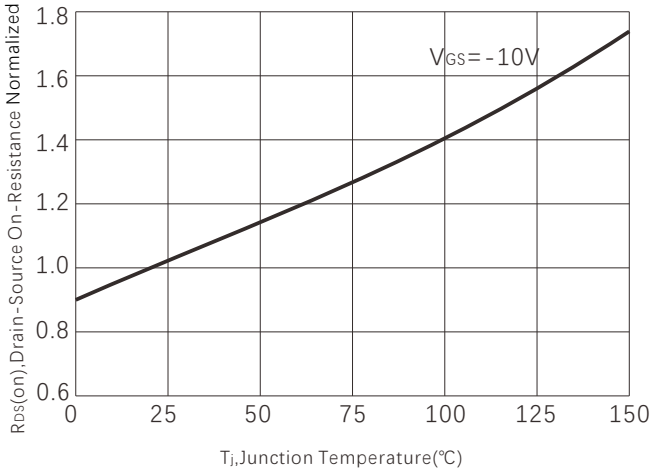

Figure 3.On-Resistance vs.Drain Current

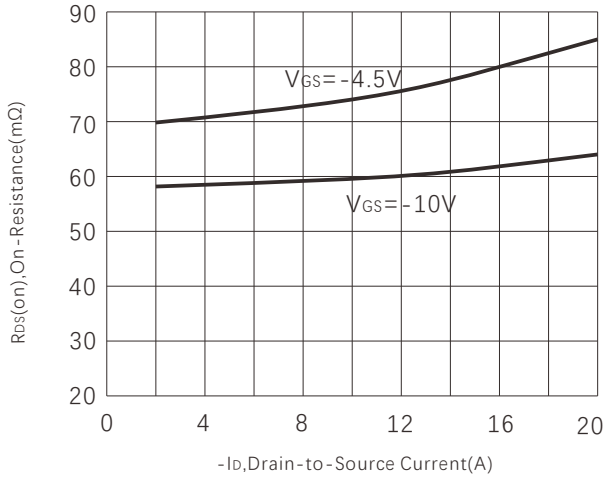

Figure 4. Capacitance

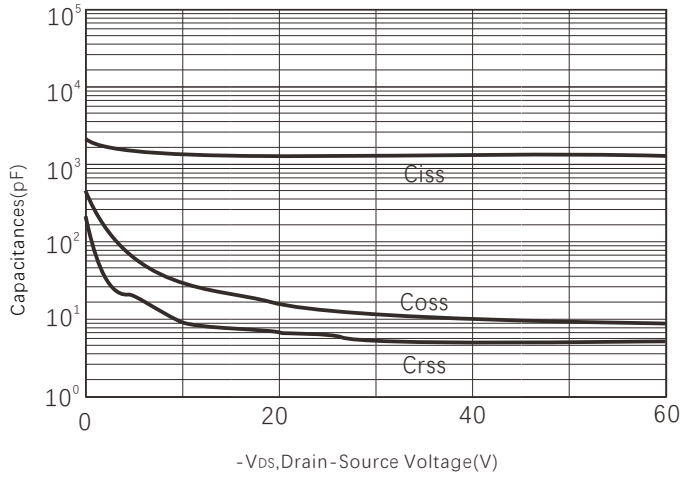

Figure 5.Gate charge

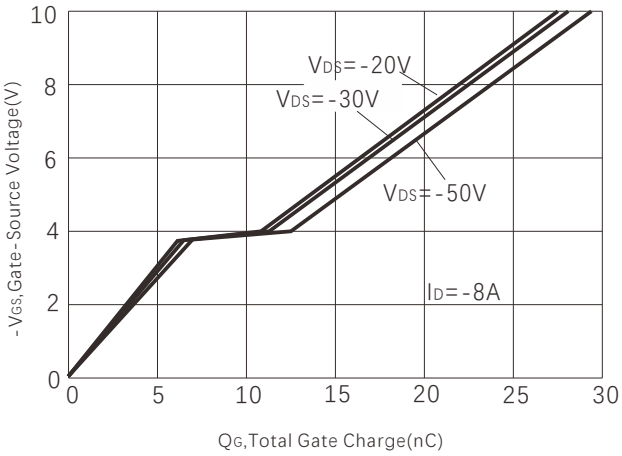

Figure 6.Source-Drain Diode Forward Voltage

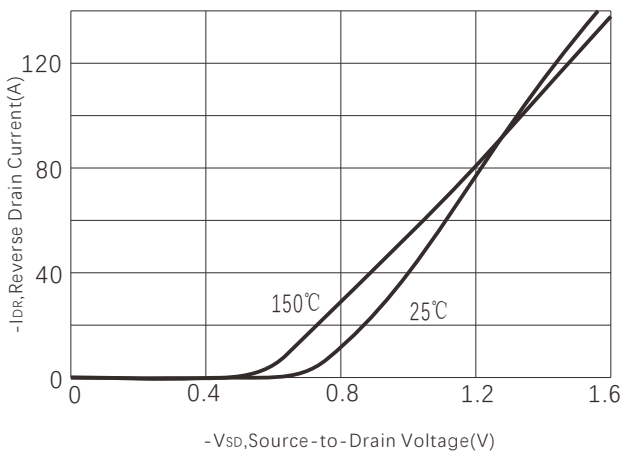

Figure7.VTH vs Temperature

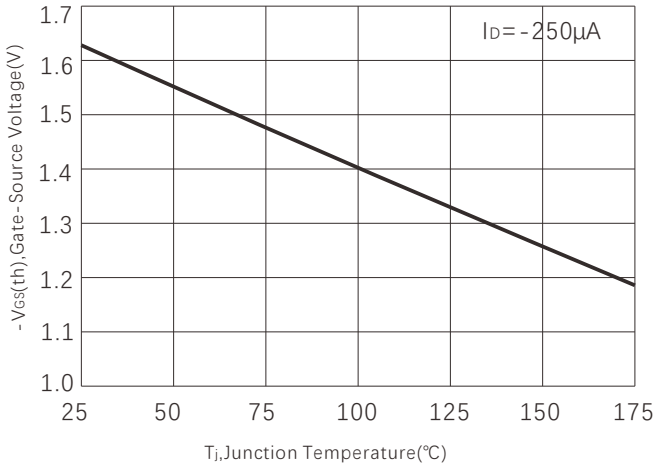

Figure 8.BVdss vs Temperature

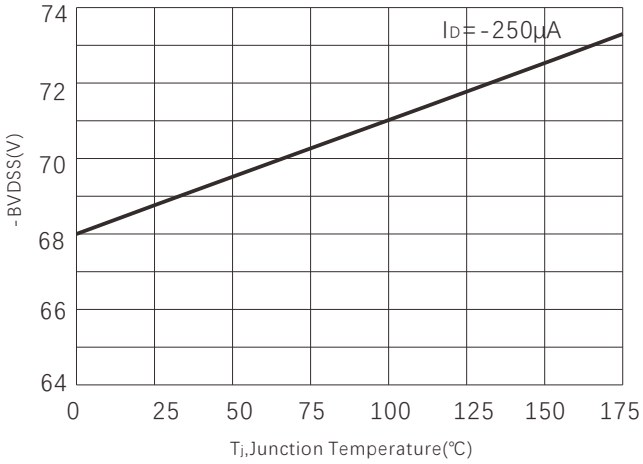

Figure 9. Safe operating area

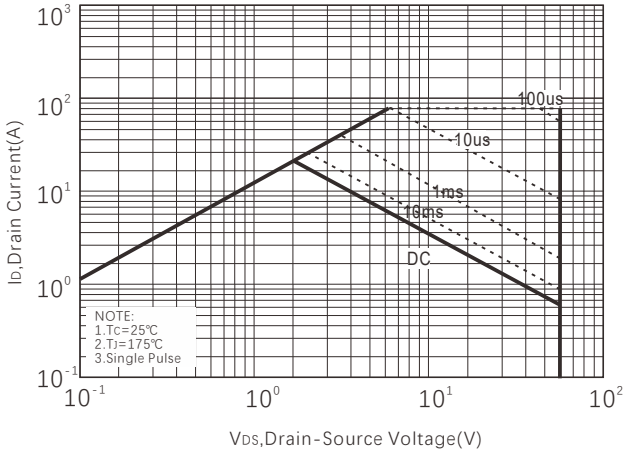

Figure 10. Power dissipation

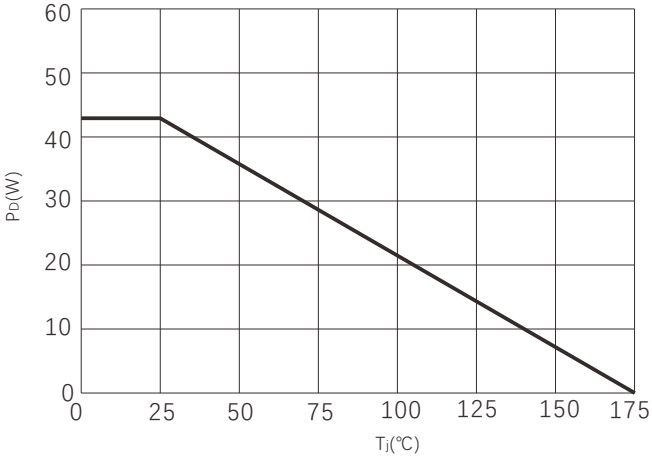

Figure 11.Normalized Maximum Transient Thermal Impedance

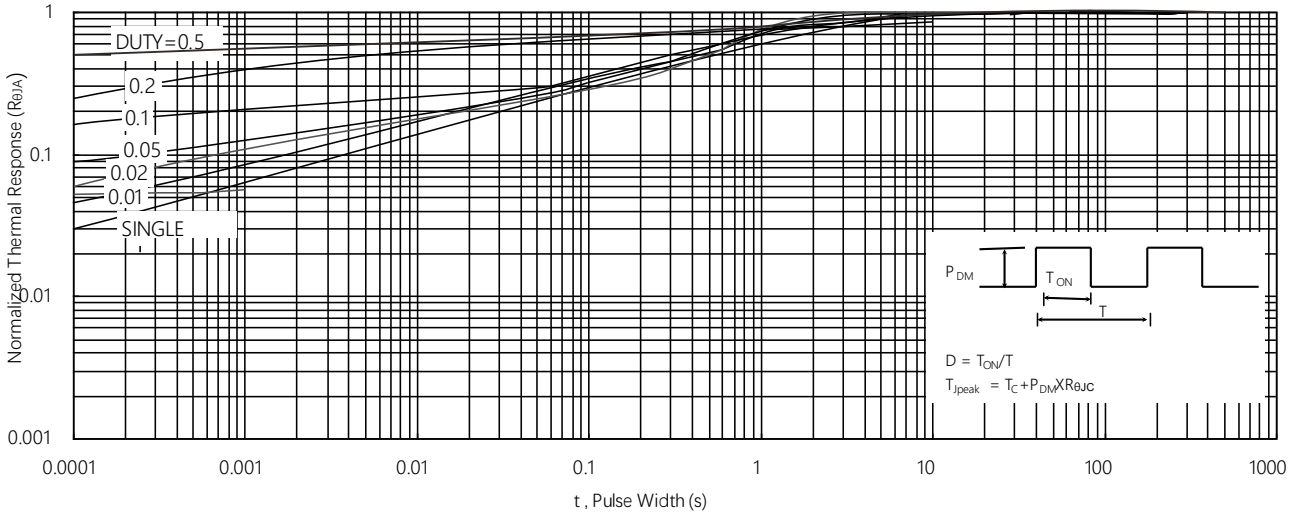

Typical Test Circuit

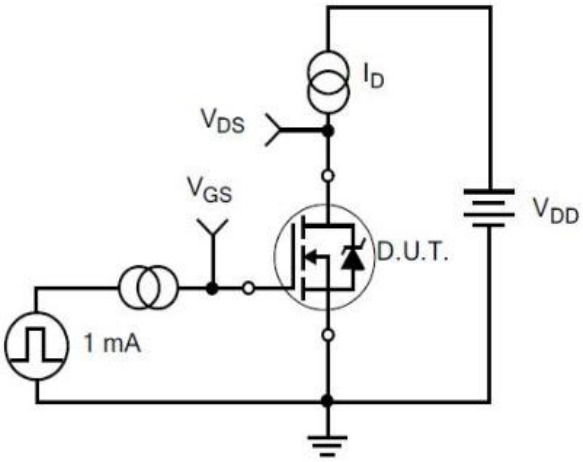

1) Gate Charge Test Circuit

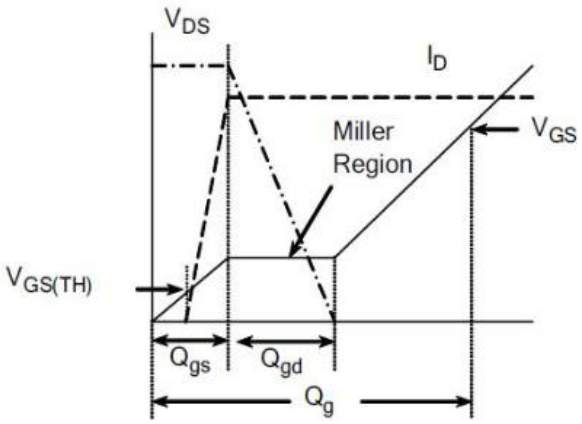

2) . Gate Charge Waveform

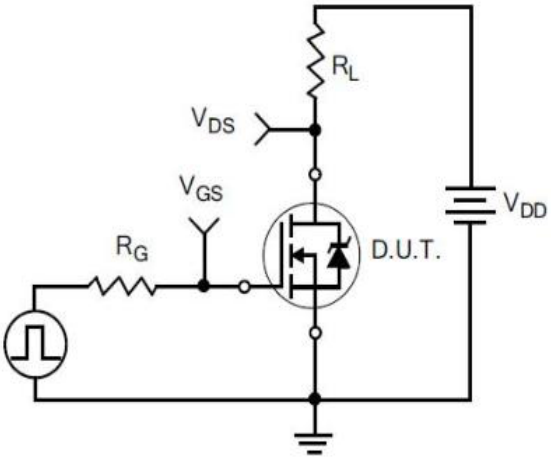

3) Resistive Switching Test Circuit

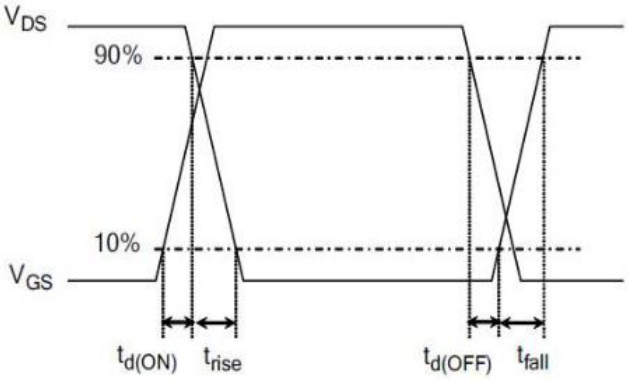

4) Resistive Switching Waveforms

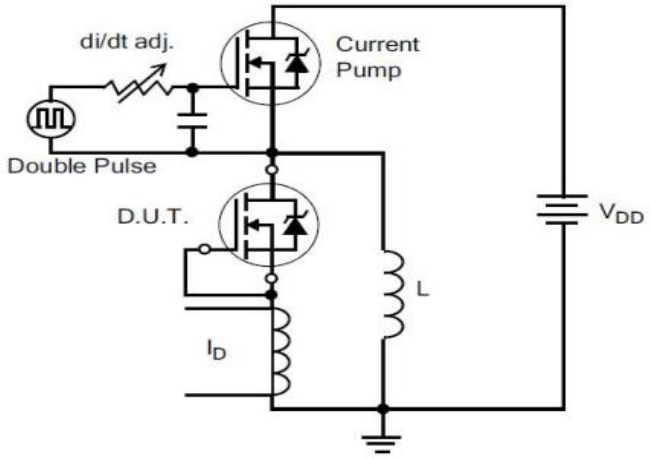

5) Diode Reverse Recovery Test Circuit

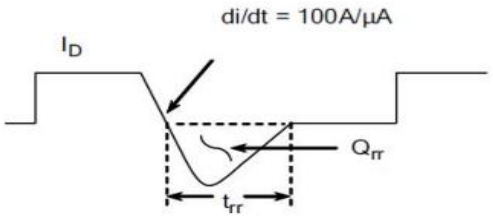

6) Diode Reverse Recovery Waveform

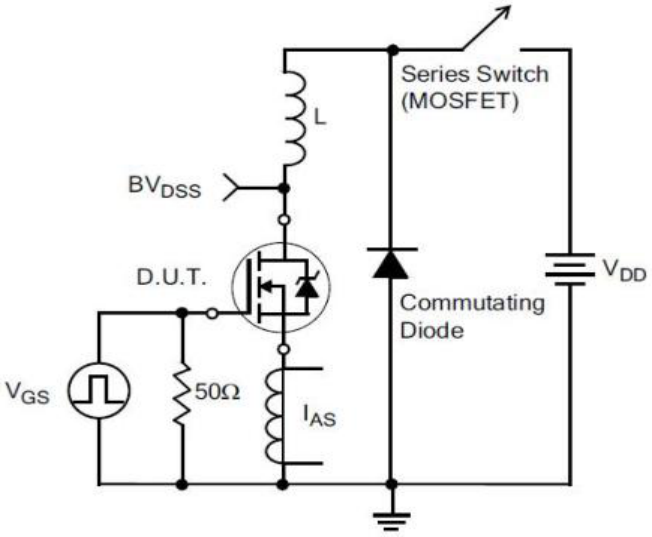

7) . Unclamped Inductive Switching Test Circuit

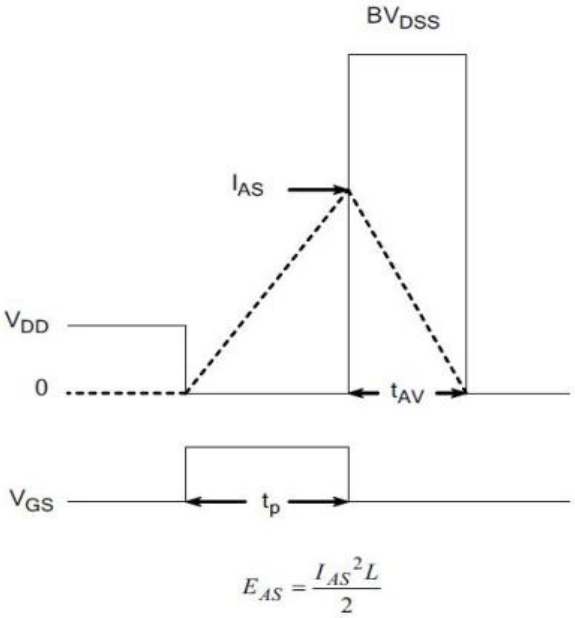

8) Unclamped Inductive Switching Waveforms

Product Names Rules

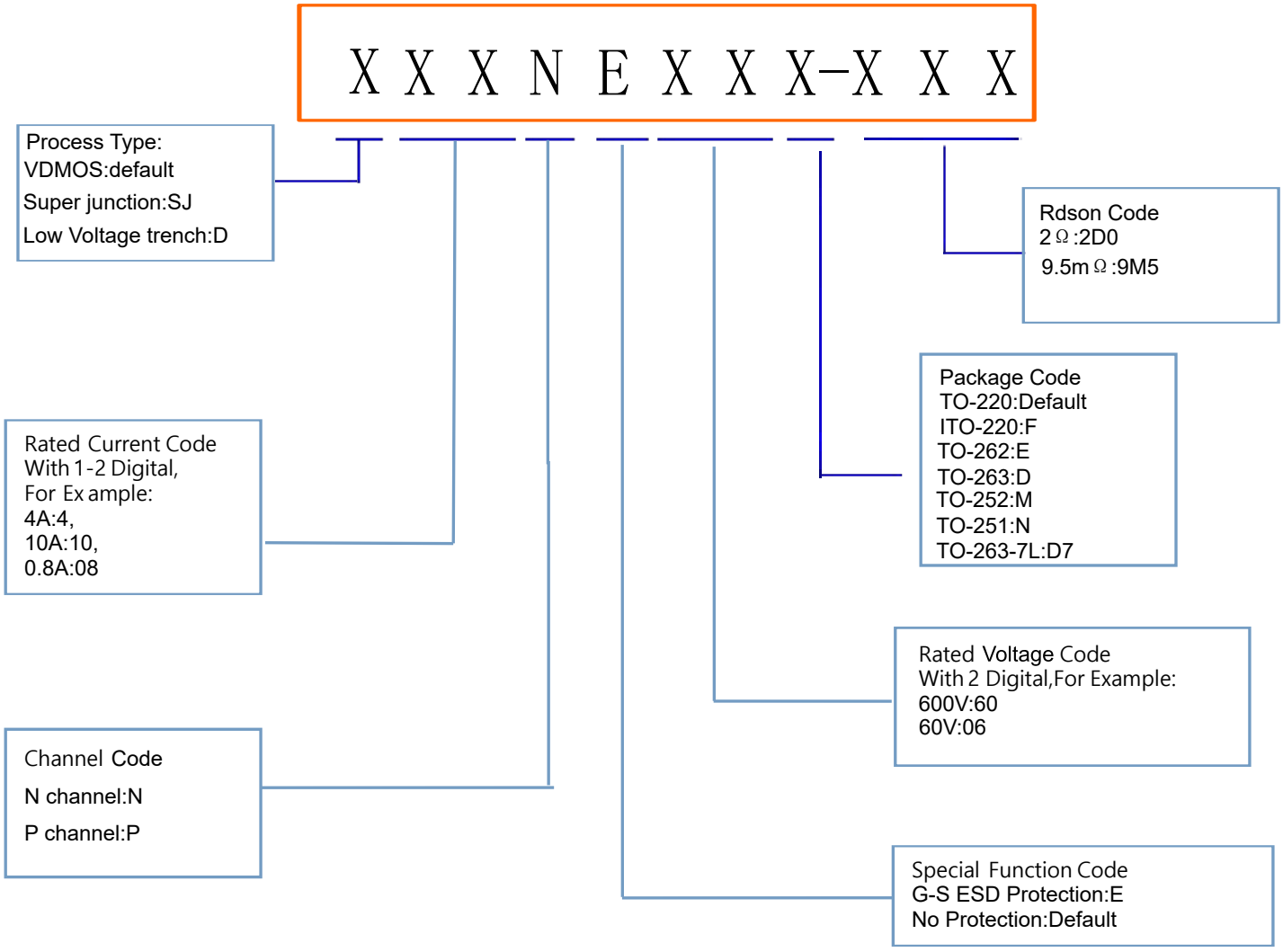

Dimensions

TO-220 PACKAGE OUTLINE DIMENSIONS

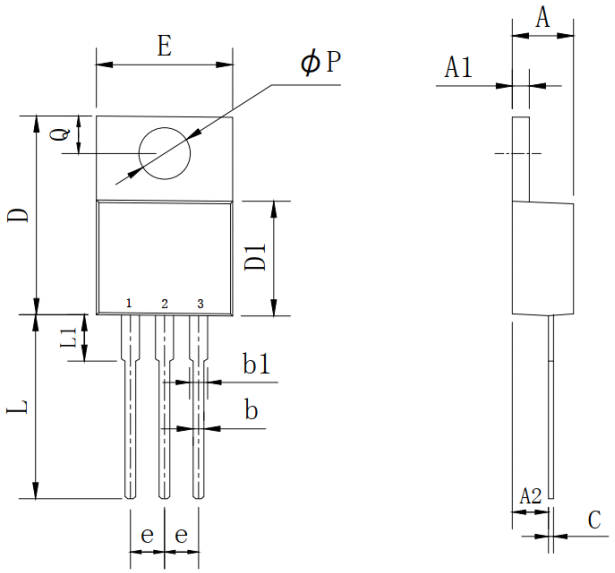

Symbol	Dimensions In Millimeters		Dimensions In Inches	
	MIN	MAX	MIN	MAX
A	4.25	4.87	0.167	0.192
A1	1.07	1.47	0.042	0.058
A2	2.03	2.92	0.080	0.115
b	0.51	1.11	0.020	0.044
b1	0.97	1.6	0.038	0.063
C	0.3	0.7	0.012	0.028
D	14.6	15.9	0.575	0.626
D1	8.04	9.3	0.317	0.366
E	9.57	10.57	0.377	0.416
e	2.34	2.74	0.092	0.108
L	12.58	14.3	0.495	0.563
L1	2.8	4.2	0.110	0.165
P	3.4	4.14	0.134	0.163
Q	2.45	3	0.096	0.118

ITO-220 PACKAGE OUTLINE DIMENSIONS

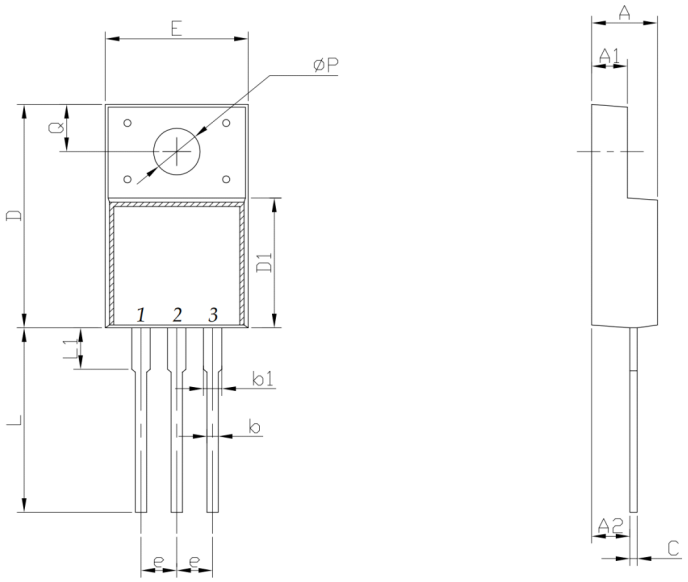

Symbol	Dimensions In Millimeters		Dimensions In Inches	
	MIN	MAX	MIN	MAX
A	4.24	4.9	0.167	0.193
A1	2.3	2.92	0.091	0.115
A2	2.61	2.81	0.103	0.111
b	0.3	1	0.012	0.039
b1	0.9	1.55	0.035	0.061
C	0.3	0.7	0.012	0.028
D	14.5	16.36	0.571	0.644
D1	8.8	9.41	0.346	0.370
E	9.5	10.5	0.374	0.413
e	2.3	2.75	0.091	0.108
L	12.6	14	0.496	0.551
L1	2.45	4.3	0.096	0.169
P	2.9	3.8	0.114	0.150
Q	2.5	3.55	0.098	0.140

Dimensions

TO-263 PACKAGE OUTLINE DIMENSIONS

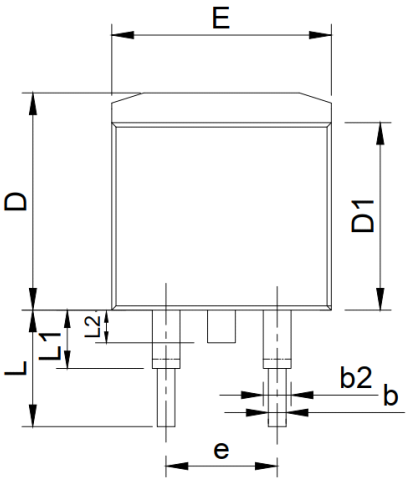

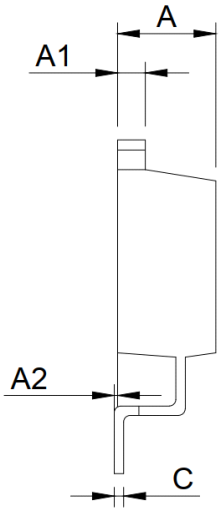

Symbol	Dimensions In Millimeters		Dimensions In Inches	
	MIN	MAX	MIN	MAX
A	4.25	4.87	0.167	0.192
A1	1.07	1.47	0.042	0.058
A2	0	0.25	0.000	0.010
b	0.61	1.01	0.024	0.040
b1	1.2	1.34	0.047	0.053
C	0.3	0.6	0.012	0.024
D	9.48	10.84	0.373	0.427
D1	8.49	9.3	0.334	0.366
E	9.7	10.31	0.382	0.406
e	4.88	5.28	0.192	0.208
L	4.46	5.85	0.176	0.230
L1	1.33	2.33	0.052	0.092
L2	0	2.2	0.000	0.087

TO-262 PACKAGE OUTLINE DIMENSIONS

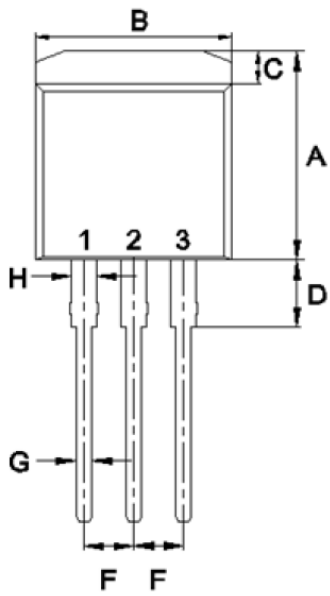

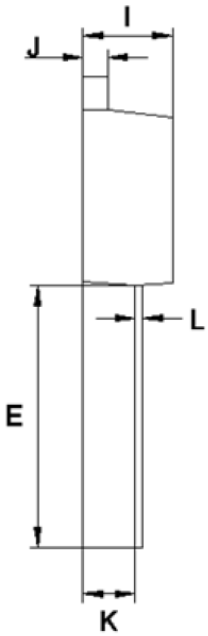

Symbol	Dimensions In Millimeters		Dimensions In Inches	
	MIN	MAX	MIN	MAX
A	10.14	11.14	0.399	0.439
B	9.57	10.57	0.377	0.416
C	1.15	1.84	0.045	0.072
D	2.95	3.95	0.116	0.156
E	12.25	13.75	0.482	0.541
F	2.34	2.74	0.092	0.108
G	0.51	1.11	0.020	0.044
H	0.97	1.57	0.038	0.062
I	4.25	4.87	0.167	0.192
J	1.07	1.47	0.042	0.058
K	2.03	2.92	0.080	0.115
L	0.3	0.6	0.012	0.024

Dimensions

TO-251 PACKAGE OUTLINE DIMENSIONS

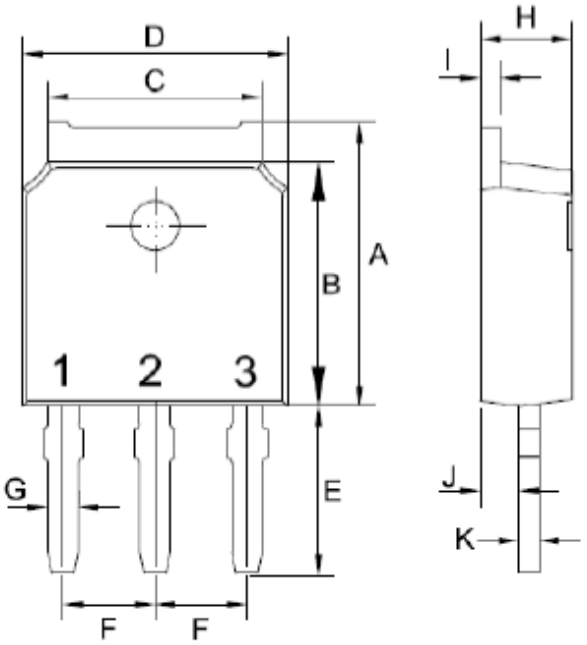

Symbol	Dimensions In Millimeters		Dimensions In Inches	
	MIN	MAX	MIN	MAX
A	6.85	7.25	0.270	0.285
B	5.8	6.3	0.228	0.248
C	5	5.53	0.197	0.218
D	6.3	6.8	0.248	0.268
E	3.5	4.35	0.138	0.171
F	2.19	2.39	0.086	0.094
G	0.45	0.85	0.018	0.033
H	2.2	2.4	0.087	0.094
I	0.41	0.61	0.016	0.024
J	0.71	1.31	0.028	0.052
K	0.41	0.61	0.016	0.024

TO-252 PACKAGE OUTLINE DIMENSIONS

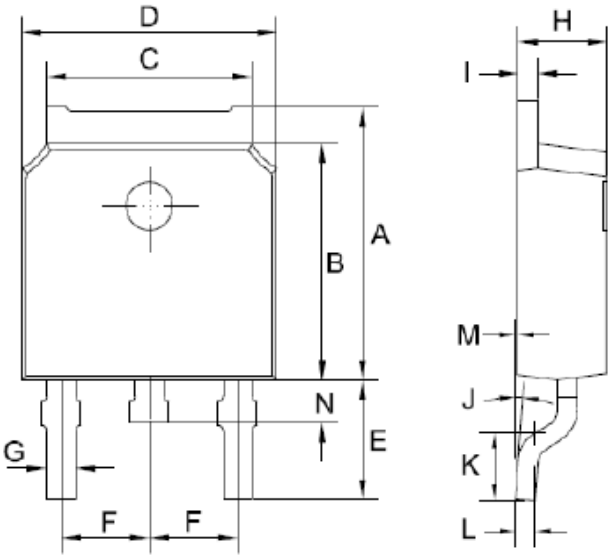

Symbol	Dimensions In Millimeters		Dimensions In Inches	
	MIN	MAX	MIN	MAX
A	6.85	7.25	0.270	0.285
B	5.8	6.3	0.228	0.248
C	5	5.53	0.197	0.218
D	6.3	6.8	0.248	0.268
E	2.6	3.3	0.102	0.130
F	2.19	2.39	0.086	0.094
G	0.45	0.85	0.018	0.033
H	2.2	2.4	0.087	0.094
I	0.41	0.61	0.016	0.024
J	0÷	8÷	0÷	8÷
K	1.45	1.85	0.057	0.073
L	0.41	0.61	0.016	0.024
M	0	0.12	0.000	0.005
P	0.6	1	0.024	0.039

Dimensions

TO-263-7L PACKAGE OUTLINE DIMENSIONS

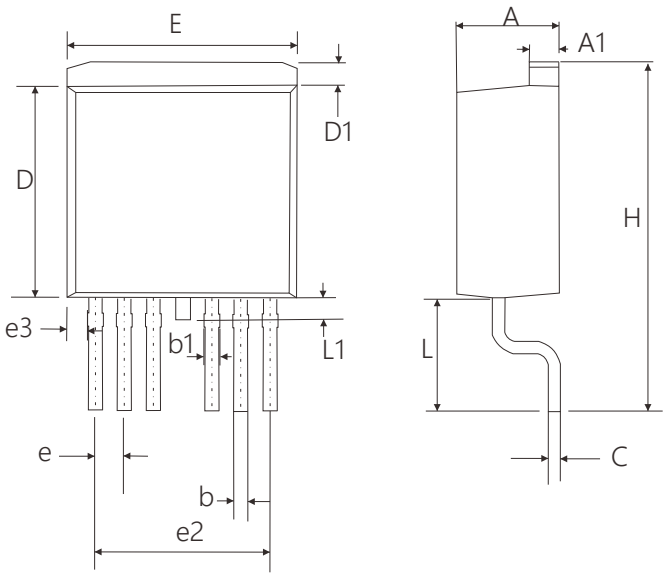

Symbol	Dimensions In Millimeters		Dimensions In Inches	
	MIN	MAX	MIN	MAX
A	4.25	4.75	0.167	0.187
A1	1.2	1.4	0.047	0.055
b	0.5	0.7	0.020	0.028
b1	0.5	0.9	0.020	0.035
C	0.4	0.6	0.016	0.024
D	9.05	9.45	0.356	0.372
D1	0.7	1.3	0.028	0.051
E	9.8	10.2	0.386	0.402
e	1.07	1.47	0.042	0.058
e2	7.32	7.92	0.288	0.312
e3	0.64	1.04	0.025	0.041
H	14.65	15.65	0.577	0.616
L	4.47	5.47	0.176	0.215
L1	0.90	1.50	0.035	0.059

Friendship Reminder

■ JiNan JingHeng（hereinafter referred to as JH） reserves the right to make changes to this document and its products and specifications at anytime without notice.

■ Customers should obtain and confirm the latest product information and specifications before final design, purchase or use.

■ JH makes no warranty, representation or guarantee regarding the suitability ofi ts products for any particular purpose, nor does JH assume any liability for application assistance or customer product design.

■ JH does not warrant or accept any liability with products which are purchased or used for any unintended or unauthorized application.

■ No license is granted by implication or otherwise under any intellectual property rights of JH.

■ JH's products are not authorized for use as critical components in life support devices or systems without express written approval of JH.