# ES1K

SEMICONDUCTOR

## SURFACE MOUNT GLASS PASSIVATED JUNCTION SUPER FAST RECOVERY RECTIFIER

Reverse Voltage: 800 Volts
Forward Current:1.0Ampere

## FEATURES

- Glass passivated cavity-free junction
- Ideal for surface mount automotive applications
- Ultrafast recovery time for high efficiency
- Built-in strain relief
- Easy pick and place
- Plastic package has Underwriters Laboratory Flammability Classification 94V-0
- Lead (Pb)-free component
- Component in accordance to RoHS 2015/863/EU
- High temperature soldering guaranteed:260℃/10 seconds at terminals

## SMA(DO-214AC)

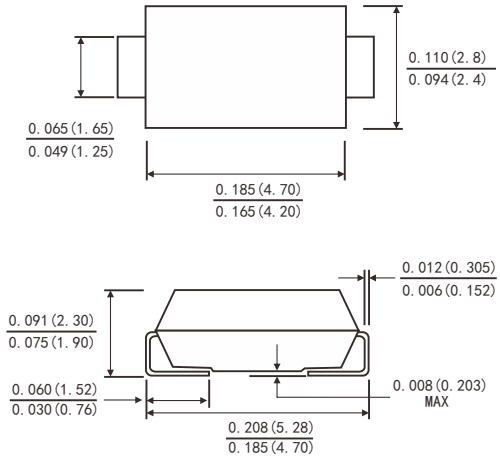


Dimensions in inches and (millimeters)

## MECHANICAL DATA

- Case: JEDEC SMA(DO-214AC) molded plastic body
- TerMINals: Solder Plated, solderable per MIL-STD-750,method 2026
- Polarity: Color band denotes cathode end
- Weight: 0.002ounce, 0.064 gram

## MAXIMUM RATINGS AND ELECTRICAL CHARACTERISTICS

(Rating at 25˚C ambient temperature unless otherwise specified ,Single phase ,half wave ,60HZ,resistive or inductive load.
For capacitive load,derate current by 20%.)

| Parameter | | Symbols | ES1K | Units |
|---|---|---|---|---|
| Maximum Repetitive Peak Reverse Voltage | | $V_{RRM}$ | 800 | Volts |
| Maximum RMS Voltage | | $V_{RMS}$ | 560 | Volts |
| Maximum DC Blocking Voltage | | $V_{DC}$ | 800 | Volts |
| Maximum Average Forward Rectified Current at Ta=110℃ | | $I_{(AV)}$ | 1.0 | Amps |
| Peak Forward Surge Current 8.3ms single half sine-wave superimposed on rated load (JEDEC method) | | $I_{FSM}$ | 30 | Amps |
| Maximum Instantaneous Forward Voltage at 1.0 A | | $V_F$ | 1. 8 | Volts |
| Maximum DC Reverse Current At Rated DC Blocking Voltage | $T_A$=25℃ | $I_R$ | 5 | μA |
| | $T_A$=100℃ | | 100 | |
| Maximum Reverse Recovery Time(Note1) | | Trr | 35 | ns |
| Typical Junction Capacitance(Note2) | | $C_J$ | 15 | pF |
| Typical Thermal Resistance | | $R_{\theta JA}$ | 90 | °C/W |
| | | $R_{\theta JC}$ | 30 | |
| Operating Junction and Storage Temperature Range | | $T_J$, $T_{STG}$ | -55 to+150 | ˚C |

*Note*: 1.Test conditions: IF=0.5A,IR=1.0A,IRR=0.25A.
2.Measured at 1MHZ and applied reverse voltage of 4.0 Volts.

## FIG.1- FORWARD CURRENT DERATING CURVE

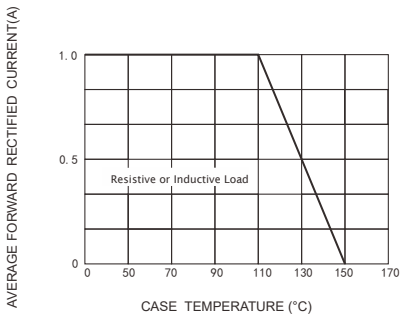


## FIG.2-MAXIMUM NON-REPETITIVE PEAK FORWARD SURGE CURRENT

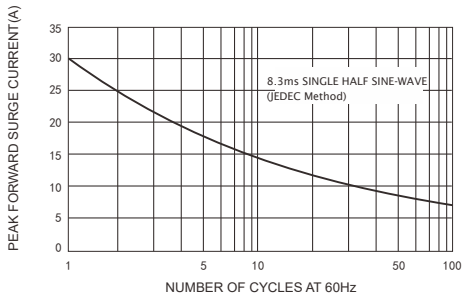


## FIG.3-TYPICAL InsTANTANEOUS FORWARD CHARACTERISTICS

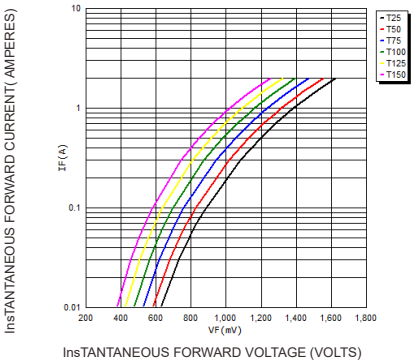


## FIG.4-TYPICAL REVERSE CHARACTERISTICS

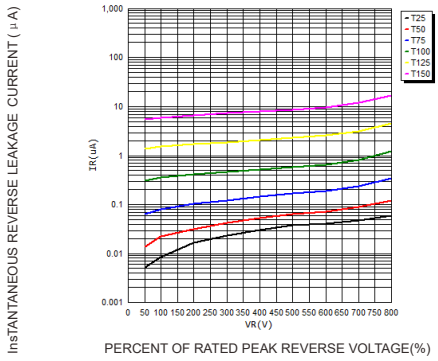


## FIG.5-TYPICAL JUNCTION CAPACITANCE

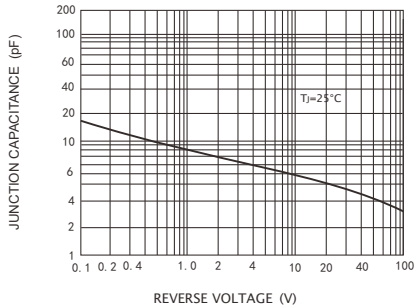

# Friendship Reminder

■ JiNan JingHeng（hereinafter referred to as JH） reserves the right to make changes to this document and its products and specifications at anytime without notice.

■ Customers should obtain and confirm the latest product information and specifications before final design, purchase or use.

■ JH makes no warranty, representation or guarantee regarding the suitability ofi ts products for any particular purpose, nor does JH assume any liability for application assistance or customer product design.

■ JH does not warrant or accept any liability with products which are purchased or used for any unintended or unauthorized application.

■ No license is granted by implication or otherwise under any intellectual property rights of JH.

■ JH's products are not authorized for use as critical components in life support devices or systems without express written approval of JH.